Simple **Types of Levers** Machines

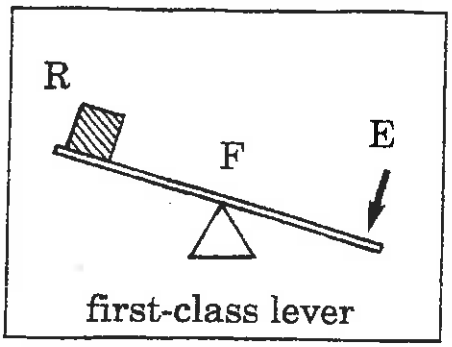

first-class lever

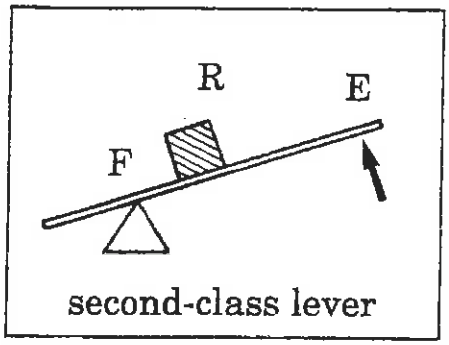

second-class lever

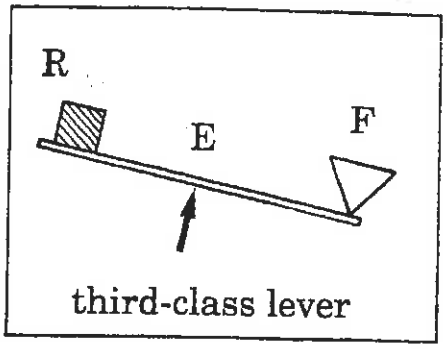

third-class lever

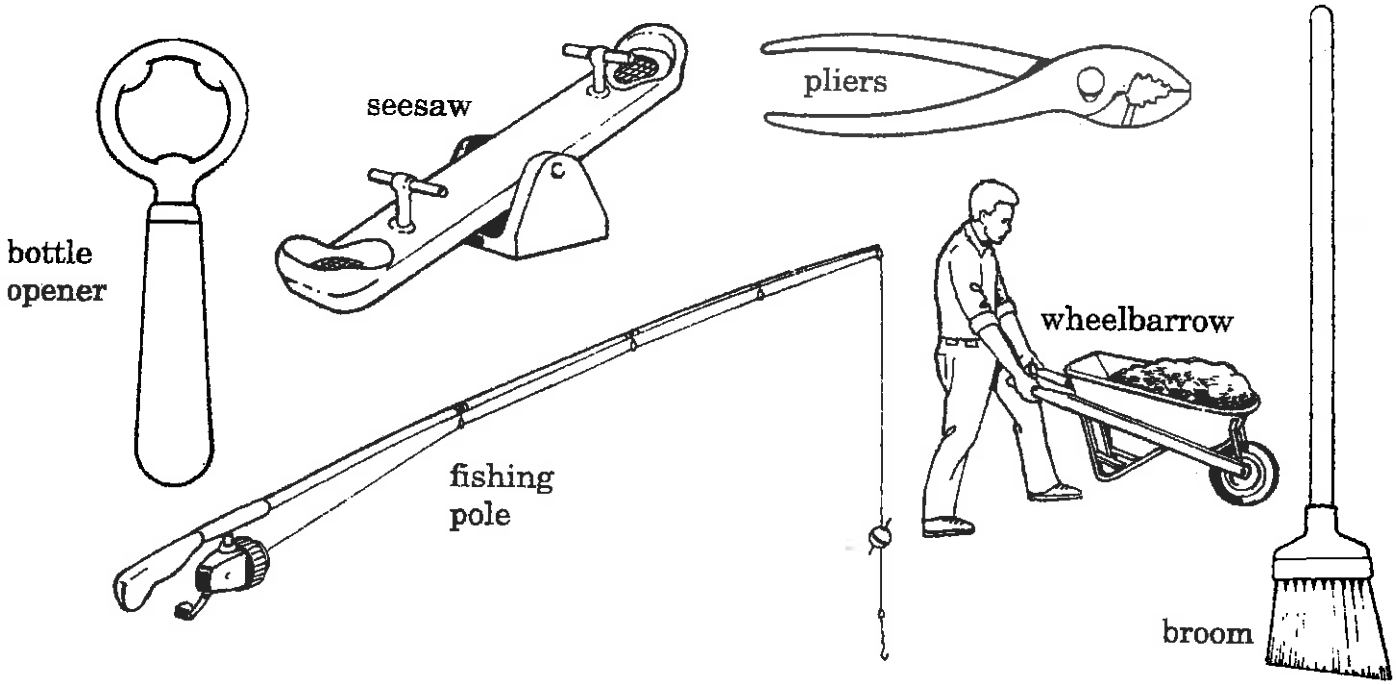

1. In which type of lever are the resistance and effort moving in opposite directions? _____
2. In which type of lever is the effort between the fulcrum and the resistance? _____
3. Identify these machines as first, second, or third-class levers by writing 1, 2, or 3 in the spaces provided.

a. crowbar _____	e. pliers _____	i. snow shovel _____
b. bottle opener _____	f. broom _____	j. seesaw _____
c. rowboat oars _____	g. wheelbarrow _____	k. nut cracker _____
d. fishing pole _____	h. lifting weight with forearm _____	l. skull pivoting on vertebra _____

4. Why is the position of the fulcrum important, particularly in first-class levers?

_____

_____

5. Why are pliers considered a first-class lever? _____

_____

The Lever

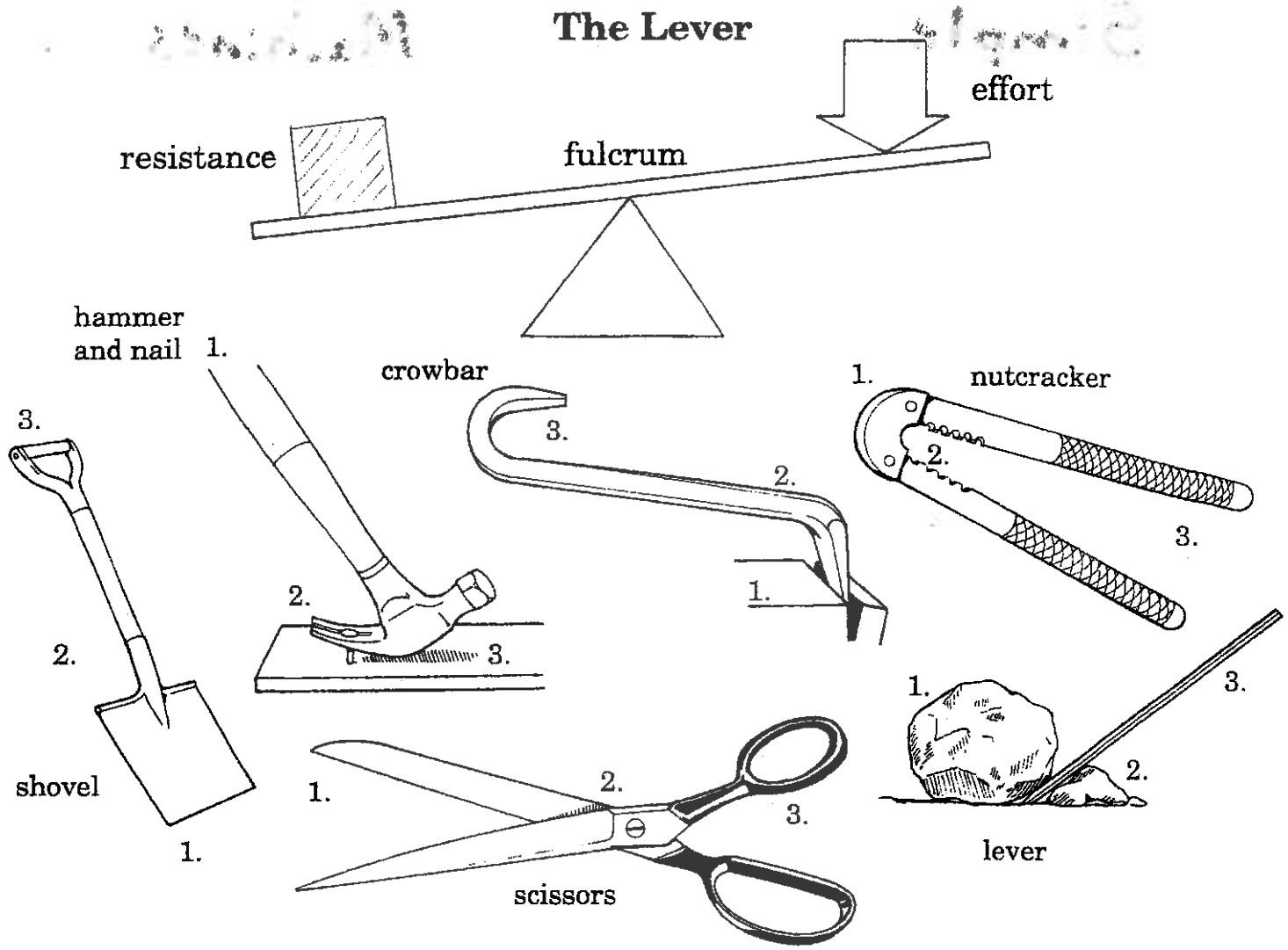

1. What are the three elements of a lever? _____
2. By each number above, write F for fulcrum, R for resistance, or E for effort.
3. Write definitions for each of the following:
   a. resistance _____
   b. fulcrum _____
   c. effort _____
4. Write the word or words that will make each sentence a true statement.
   a. _____ have two connected levers that can be used to _____ paper or cloth.
   b. A _____ is a simple machine that needs two hands as the _____ and _____ of a lever are used to move dirt.
   c. In second-class levers, the _____ is between the effort and _____.
   d. When the fulcrum is closer to the effort than to the resistance, there is a loss in _____ but a _____ in speed and distance.
   e. A seesaw is a common example of a _____-class lever.

The Inclined Plane, Wedge, and Screw

Using an inclined plane requires less effort over a longer distance.

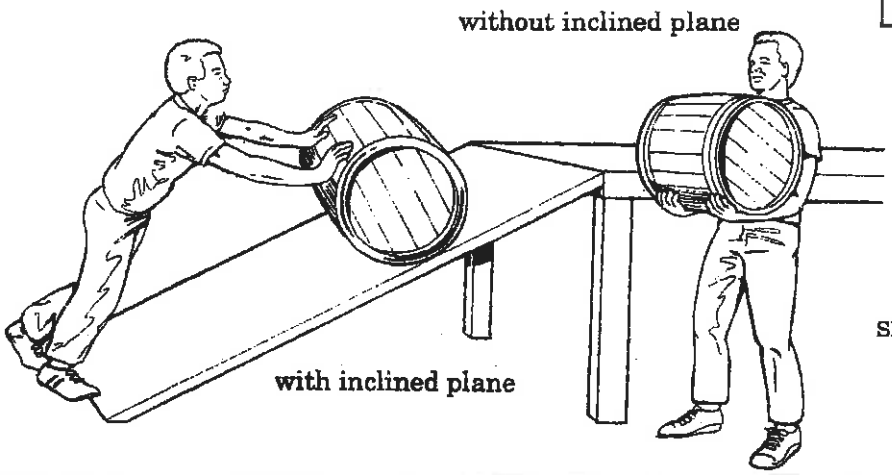

The wedge is an inclined plane that tapers to a sharp edge.

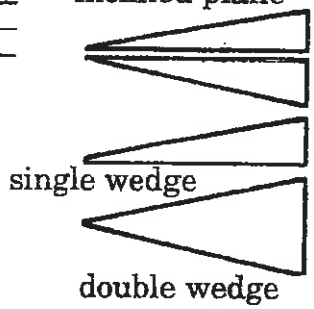

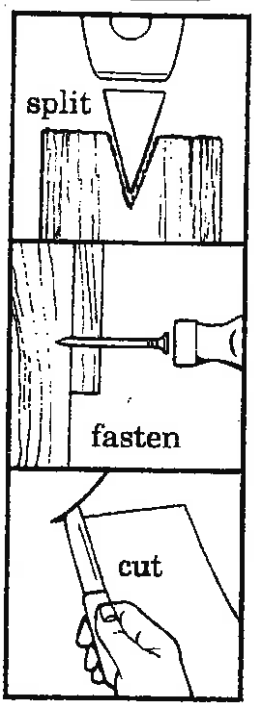

The screw is an inclined plane wound around a central cylinder.

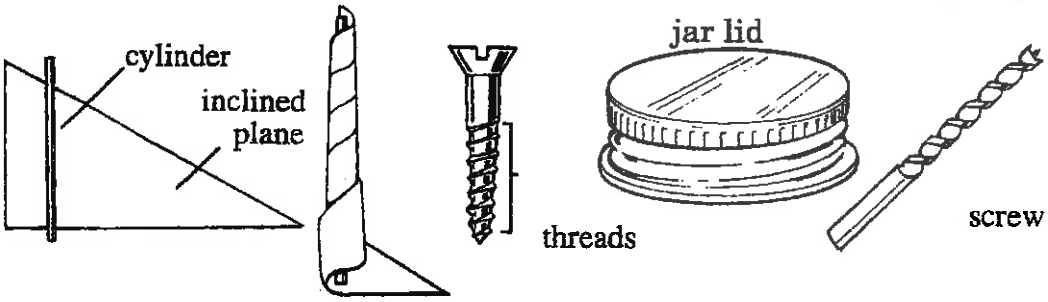

1. Describe how the inclined plane in the top illustration assists the person moving the barrel?

   _____

   _____

2. What are two inclined planes you have seen or used? _____
3. Next to the wedges named, write whether they are used to split, cut, or fasten.

   a. chisel _____ d. spike _____

   b. scalpel _____ e. hatchet _____

   c. tack _____ f. doorstop _____

4. Write the word or words that will make each sentence a true statement.

   a. Using an inclined plane to lift a barrel requires less _____ over a greater _____.

   b. Lifting the barrel from the ground to a platform requires _____ effort over a _____ distance.

   c. A _____ is an inclined plane wound around a cylinder.

5. Name two examples of screws other than the ones shown above. _____

The Gear

Gears increase speed and force or change direction.

Small gear turns twice as fast as large gear, but with less force.

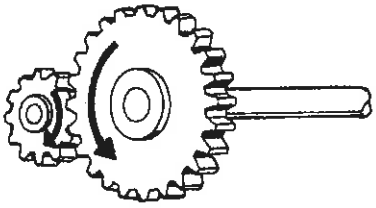

Force on axle turns gear.

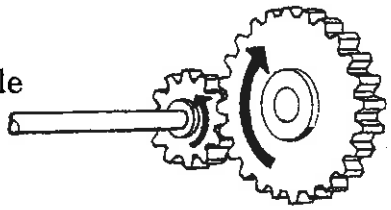

Large gear turns half as fast as small gear, but with greater force.

Types of Gear Arrangements

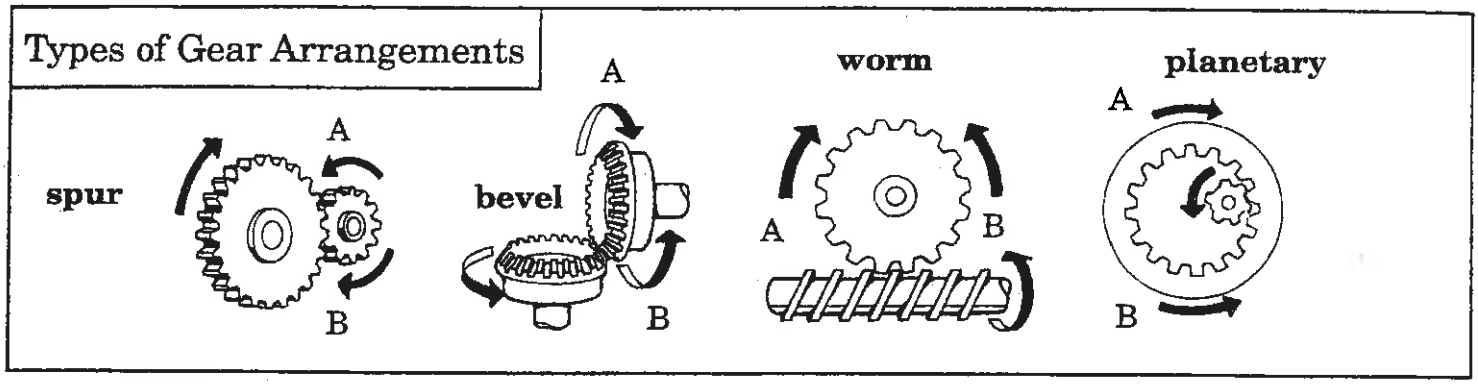

Gear Uses

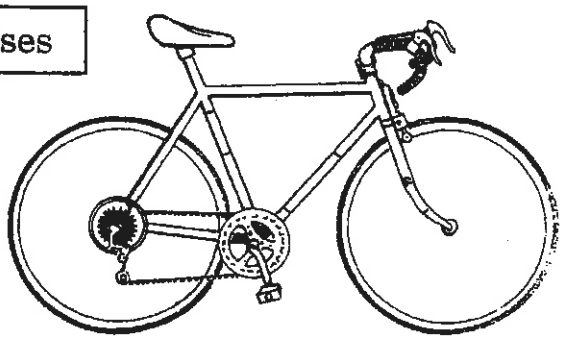

bicycle

watch

electric mixer

1. In the pictures of gear arrangements, a single arrow on one gear shows the direction in which it moves. Circle arrow A or B on the second gear to show the direction in which it will move.
2. List three machines, other than the ones pictured, that use gears. _____

   _____

3. Write the word or words that will make each sentence a true statement.
   a. Gears are wheels with _____ that can be used to _____ force or speed or to change _____.
   b. Two factors that determine the kind of work a gear can do are the _____ and _____ of its teeth.
   c. A motor turning the axle of a small gear will turn the connected large gear _____ (faster or slower) but with greater _____.
   d. Gears transfer _____ to different parts of a machine.
4. If the second gear turns because it is connected to the first gear, why does the first gear turn? _____

The Pulley

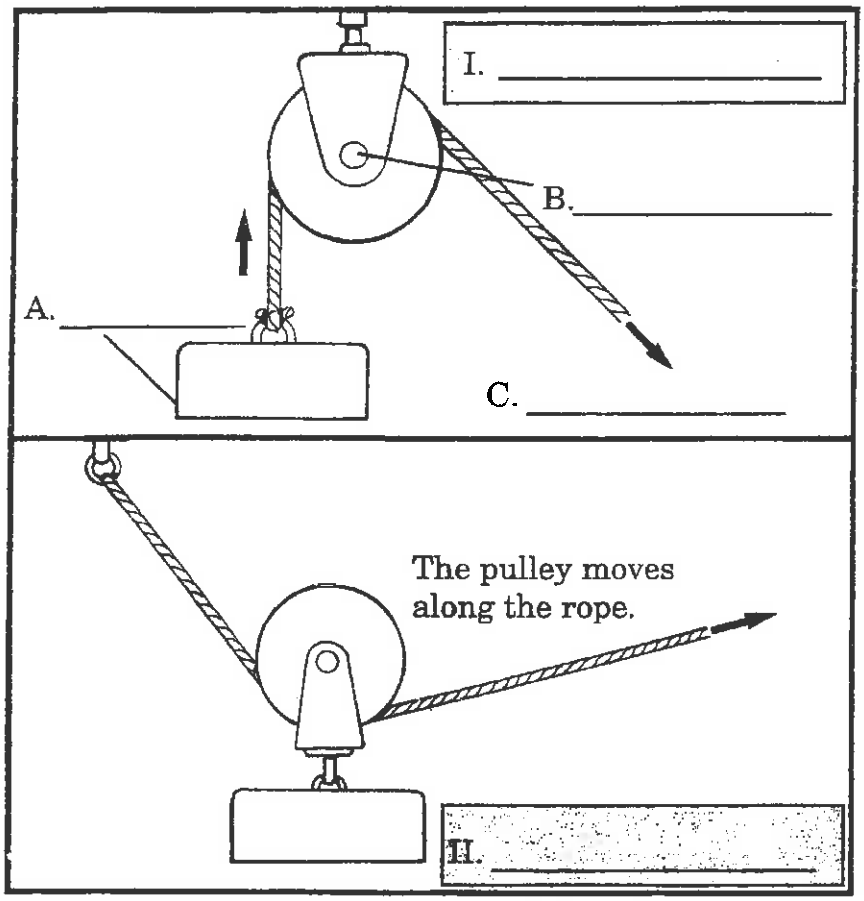

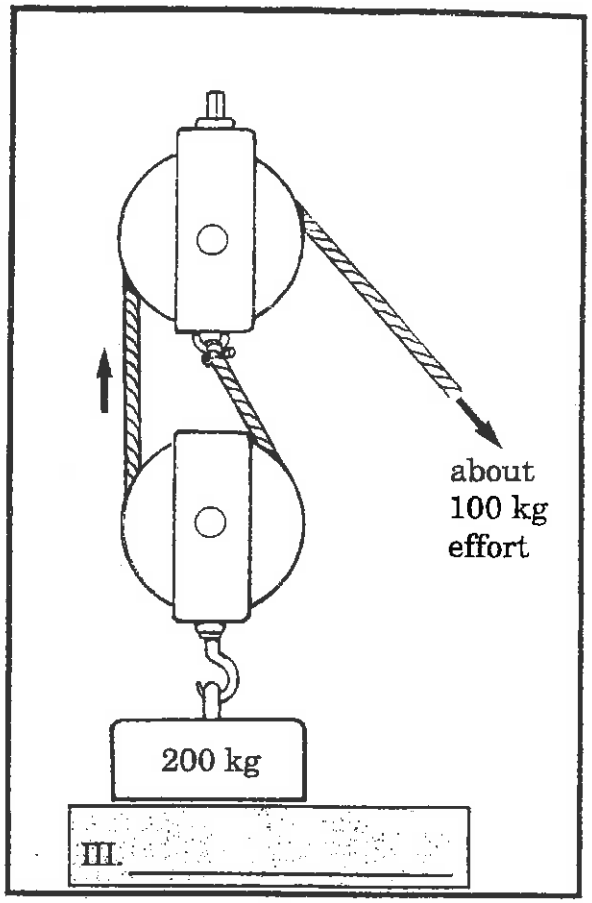

1. Label the types of pulleys in boxes I through III above.
2. Label the fulcrum, resistance, and effort on lines A through C.
3. Write the word or words that will make each sentence a true statement.
   a. Three parts of a pulley are the grooved _____, the _____, and the rope.
   b. A fixed pulley is like a turning _____-class lever because the _____ is between the _____ and the resistance.
   c. A movable pulley is like a turning _____-class lever because the _____ is between the fulcrum and the _____.
   d. The _____ pulley is used primarily to change the direction of force.
4. Name the kind of pulley used for the following.
   a. raising sails on a boat _____
   b. window blinds _____
   c. lifting very heavy weights _____
   d. painter's scaffold _____
5. What prevents the rope from slipping off the wheel of a pulley? _____
6. What is the function of a movable pulley? _____

_____

The Block and Tackle

A block and tackle is a combination of fixed and movable pulleys.

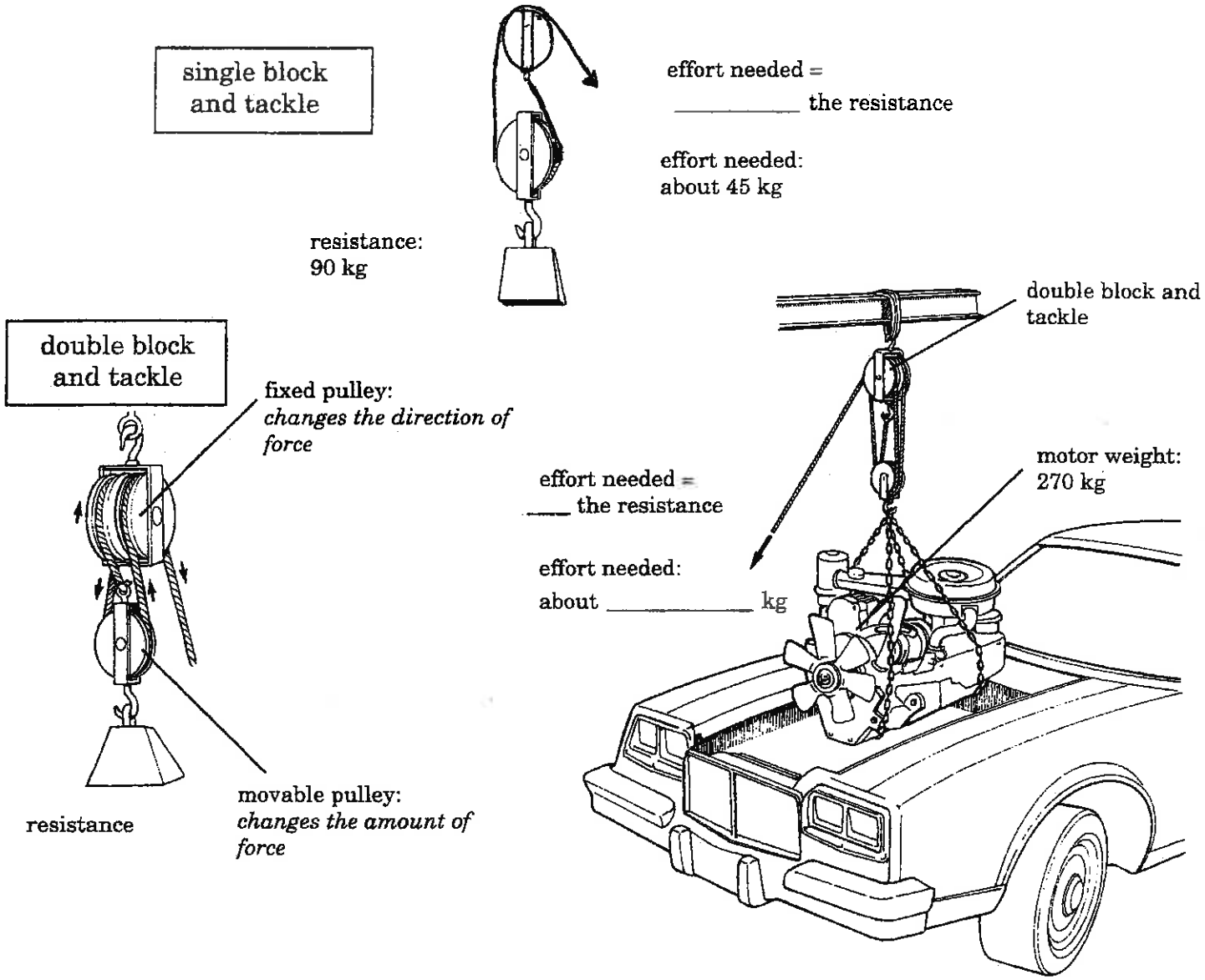

1. For the single block and tackle above, write the fraction that tells how much effort is needed to lift the resistance: 1/2, 1/3, or 1/4.
2. For the double block and tackle above, write the number of kilograms of effort needed to lift the motor.
3. Write the word or words that will make each sentence a true statement.
   a. A block and tackle is also known as a _____ pulley.
   b. The two kinds of pulleys that make up a block and tackle are _____ and _____ pulleys.
   c. A block and tackle changes the _____ and increases _____.
   d. The more strands of rope or wire required by a block and tackle, the greater the amount of _____ generated.
   e. In practice, nothing is gained by more than _____ pulleys.

The Wheel and Axle

The wheel and axle is a wheel connected to a rigid pole.

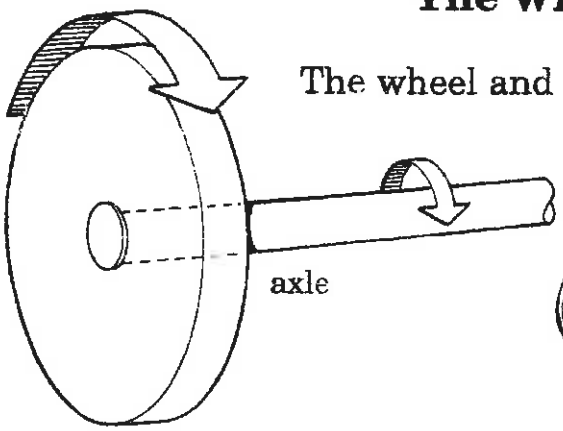

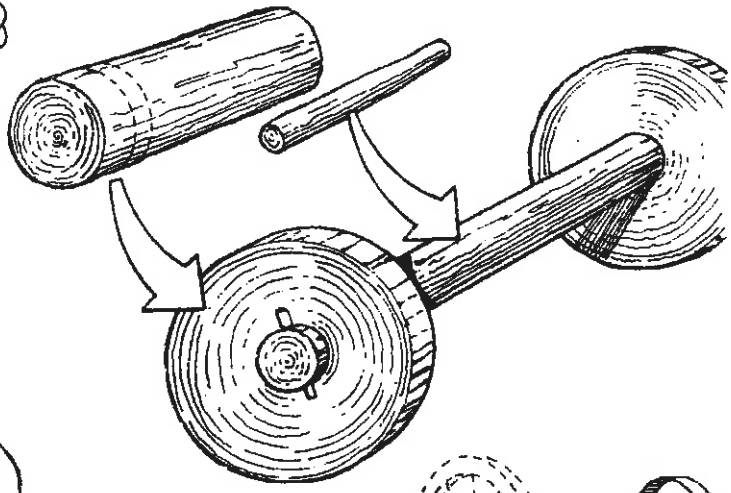

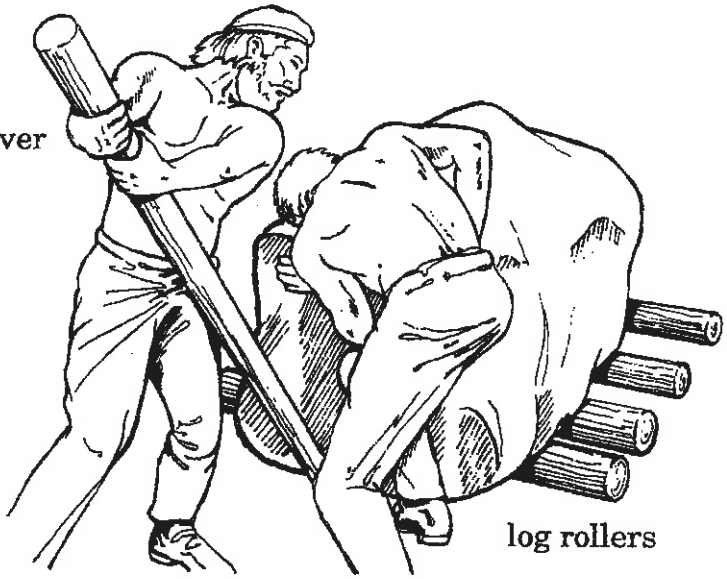

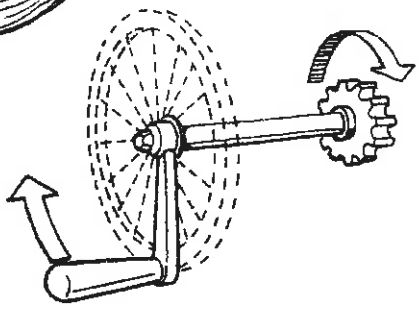

A handle can be thought of as a section of a wheel.

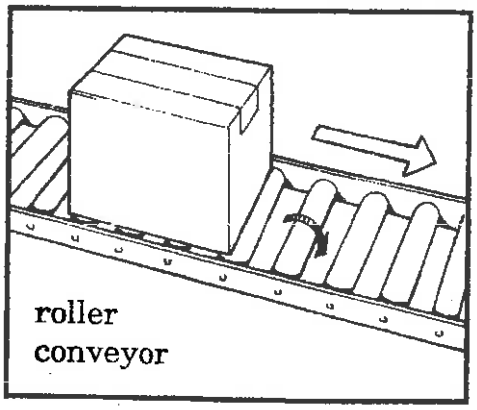

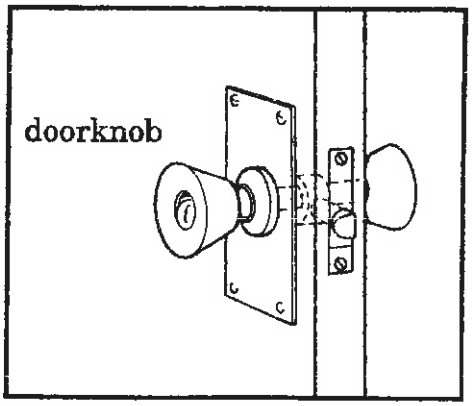

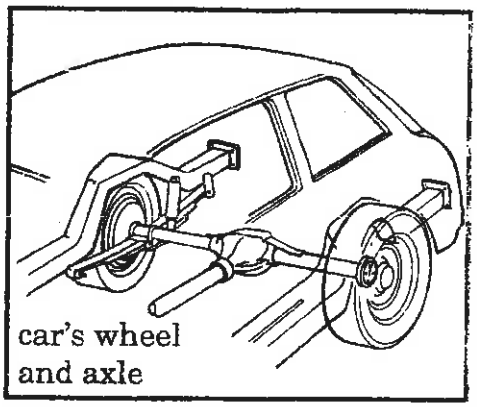

1. Why does using a wheel and axle make work easier? _____

_____

2. How did early people make a wheel and axle for their carts? _____
3. A conveyor belt, used to load or unload a truck, is made of which two simple machines?

_____

4. The handle of a pencil sharpener is like the _____ of a _____.

Simple Machines

A. _____

_____

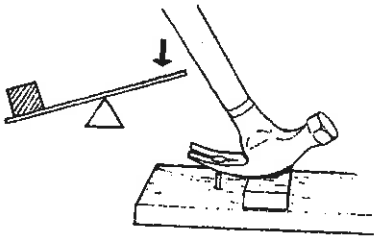

B. _____

_____

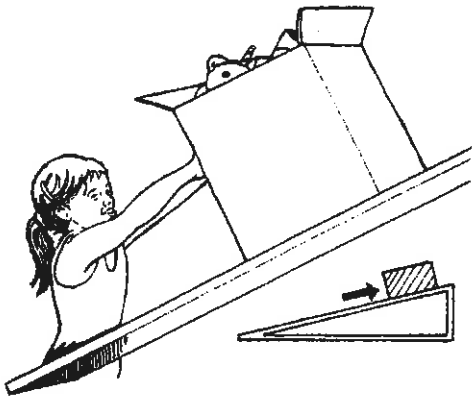

C. _____

_____

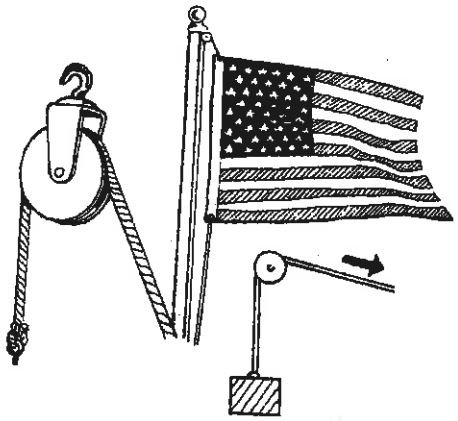

D. _____

_____

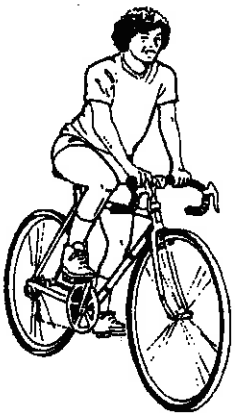

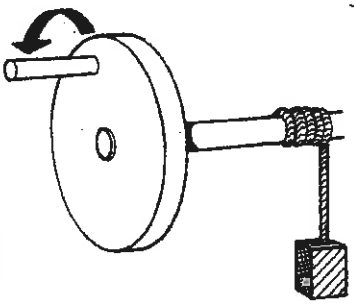

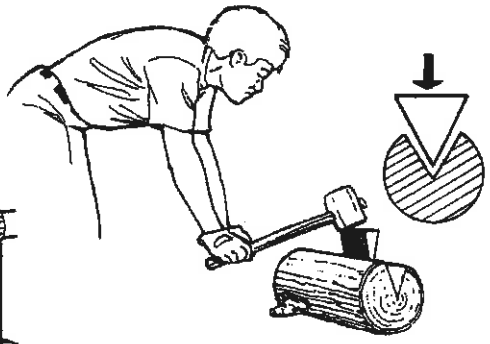

E. _____

_____

F. _____

_____

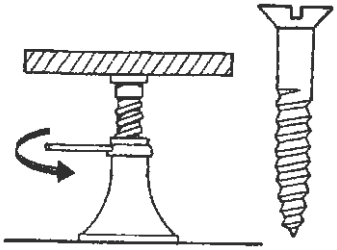

1. Label the simple machines on lines A-F above.
2. On the second line give an example of the machine other than the one pictured.
3. Identify the following simple machines.

   a. sloping surface _____ d. spiral inclined plane _____

   b. rope over a wheel _____ e. wheel connected to a shaft _____

   c. bar pivoting on a fixed point _____ f. slope tapering to a sharp edge _____
4. Name the simple machine used to do the following.

   a. chop wood _____ d. fasten pieces of wood _____

   b. load railroad cars _____ e. reduce friction on rolling objects _____

   c. remove tacks _____ f. raise and lower a sail _____
5. Write the word or words that will make each sentence a true statement.

   a. A machine can never do more work than the amount of _____ put into it.

   b. No matter how complex machines seem, they are all forms of six _____ machines.

   c. Simple machines help us make better use of our _____.